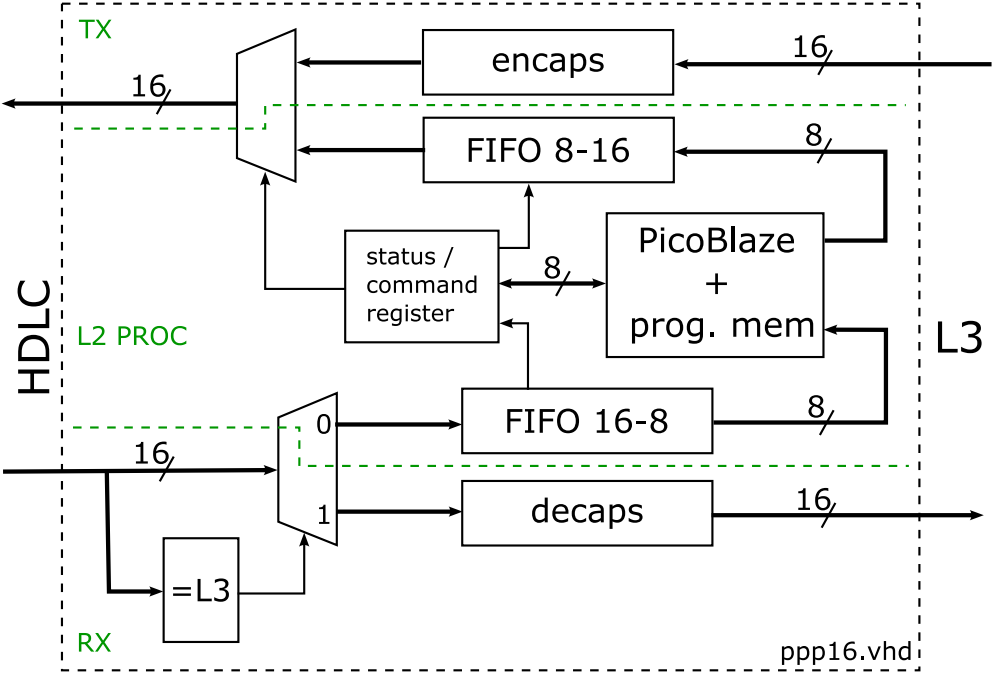
TX
encaps
16
16
FIFO 8-16
8
status /
command
register
8
PicoBlaze
+
prog. mem
HDLC
L2 PROC
L3
FIFO 16-8
8
0
16
1
decaps
16
=L3
RX
ppp16.vhd