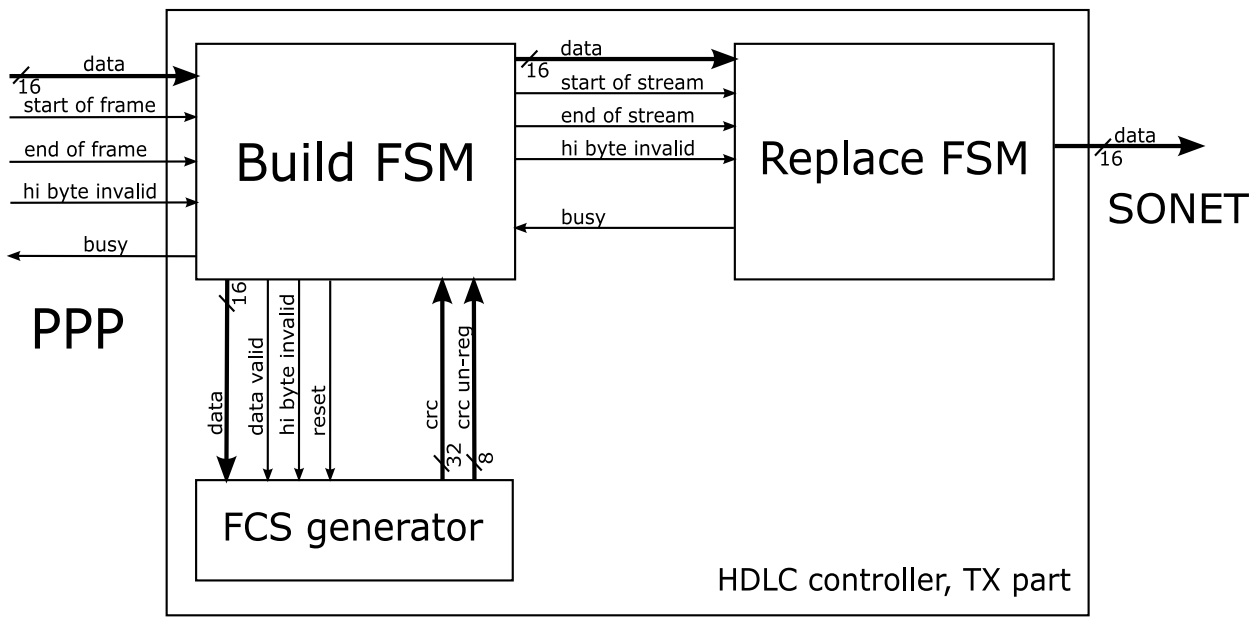
data
16
start of frame
end of frame
hi byte invalid
busy
PPP
Build FSM
data
16
start of stream
end of stream
hi byte invalid
busy
Replace FSM
data
16
SONET
16
data
data valid
hi byte invalid
reset
crc
32
crc un-reg
8
FCS generator
HDLC controller, TX part