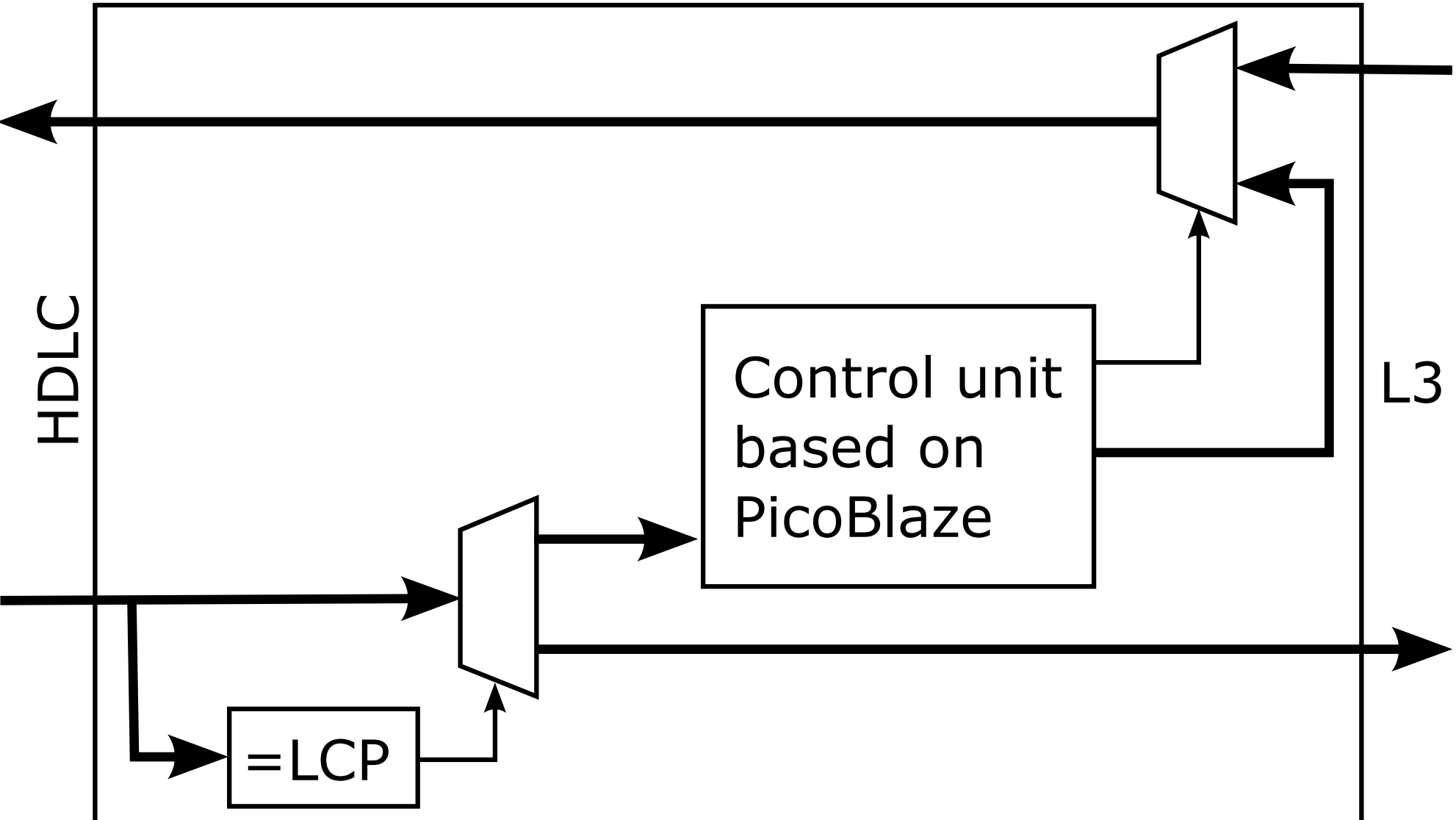
HDLC
Control unit based on PicoBlaze
L3
=LCP