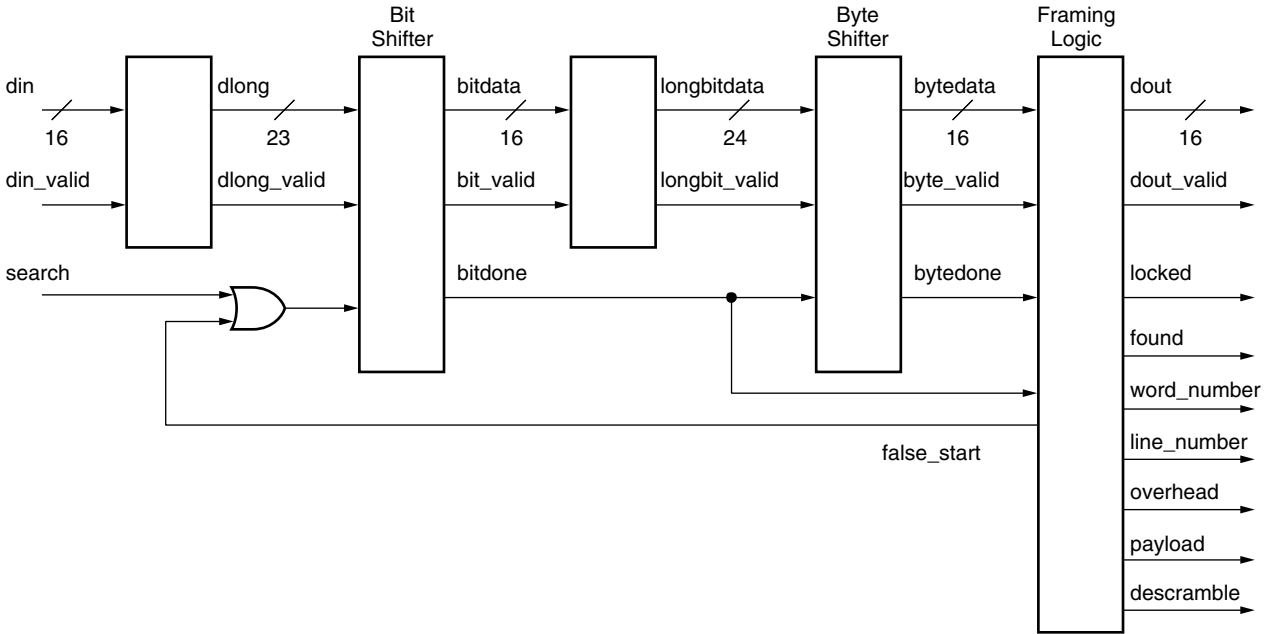
Bit Shifter
Byte Shifter
Framing Logic
din
16
dlong
23
bitdata
16
longbitdata
24
bytedata
16
dout
16
din_valid
dlong_valid
bit_valid
longbit_valid
byte_valid
dout_valid
search
bitdone
bytedone
locked
found
word_number
line_number
false_start
overhead
payload
descramble