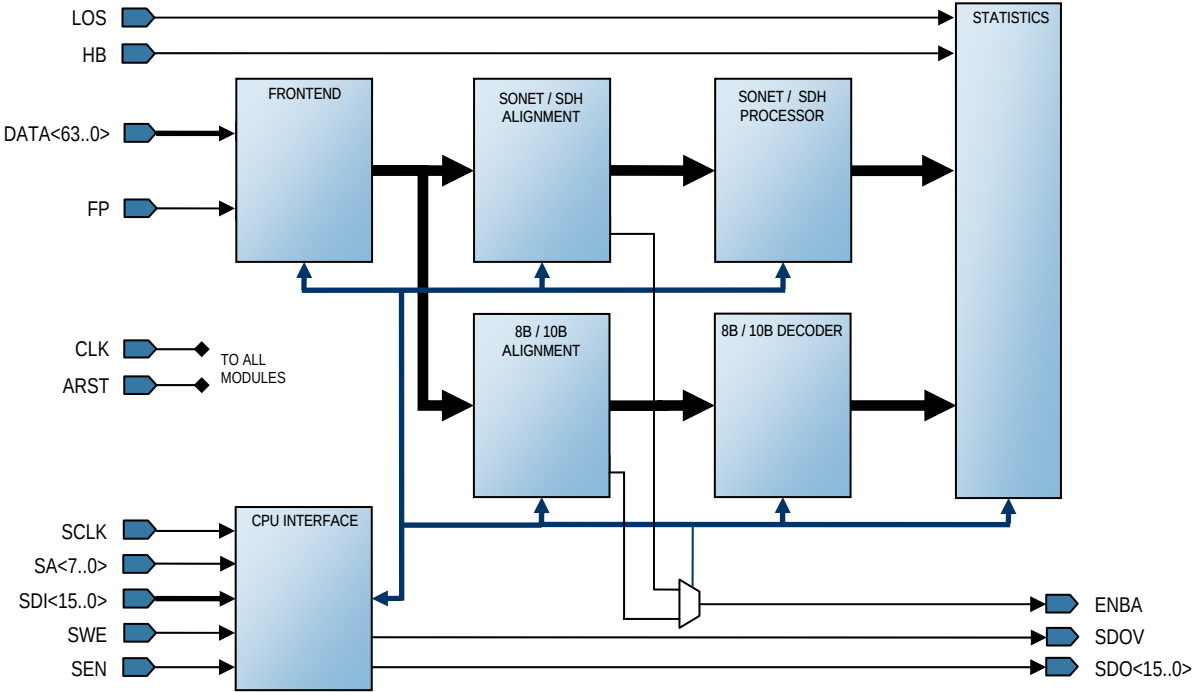
LOS
HB
STATISTICS
FRONTEND
SONET / SDH ALIGNMENT
SONET / SDH PROCESSOR
DATA<63..0>
FP
CLK
ARST
TO ALL MODULES
8B / 10B ALIGNMENT
8B / 10B DECODER
CPU INTERFACE
SCLK
SA<7..0>
SDI<15..0>
SWE
SEN
ENBA
SDOV
SDO<15..0>