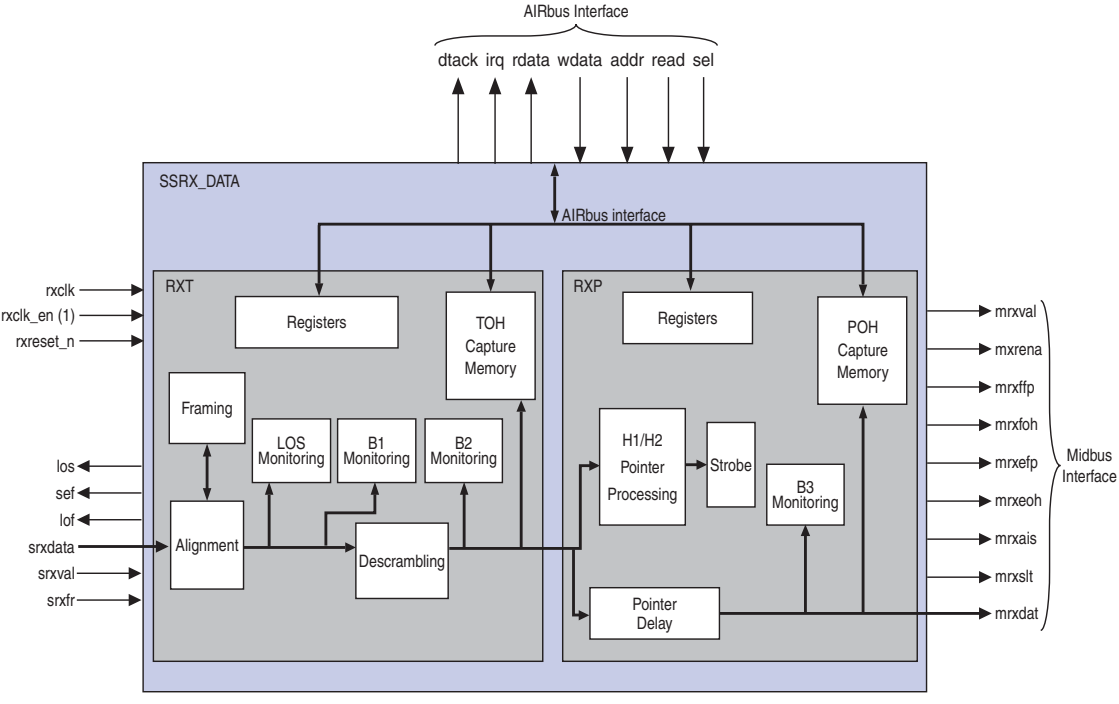
AIRbus Interface
dtack irq rdata wdata addr read sel
SSRX_DATA
AIRbus interface
RXT
Registers
TOH Capture Memory
Framing
LOS Monitoring
B1 Monitoring
B2 Monitoring
Alignment
Descrambling
RXP
Registers
POH Capture Memory
H1/H2 Pointer Processing
Strobe
B3 Monitoring
Pointer Delay
rxclk
rxclk_en (1)
rxreset_n
los
sef
lof
srxdata
srxval
srxfr
mrxval
mxrena
mrxffp
mrxfoh
mrxefp
mrxeoh
mrxais
mrxslt
mrxdat
Midbus Interface