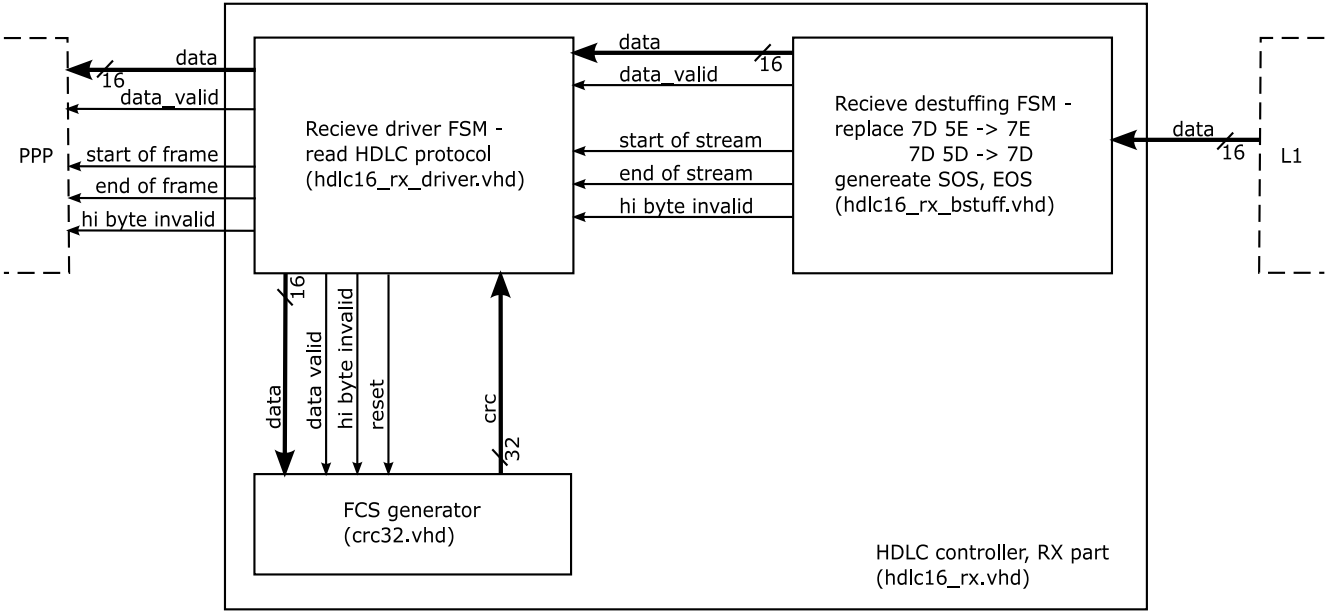
PPP
data
16
data_valid
start of frame
end of frame
hi byte invalid
Recieve driver FSM -
read HDLC protocol
(hdlc16_rx_driver.vhd)
data
16
data_valid
start of stream
end of stream
hi byte invalid
Recieve destuffing FSM -
replace 7D 5E -> 7E
7D 5D -> 7D
genereate SOS, EOS
(hdlc16_rx_bstuff.vhd)
data
16
L1
data
16
data valid
hi byte invalid
reset
crc
32
FCS generator
(crc32.vhd)
HDLC controller, RX part
(hdlc16_rx.vhd)