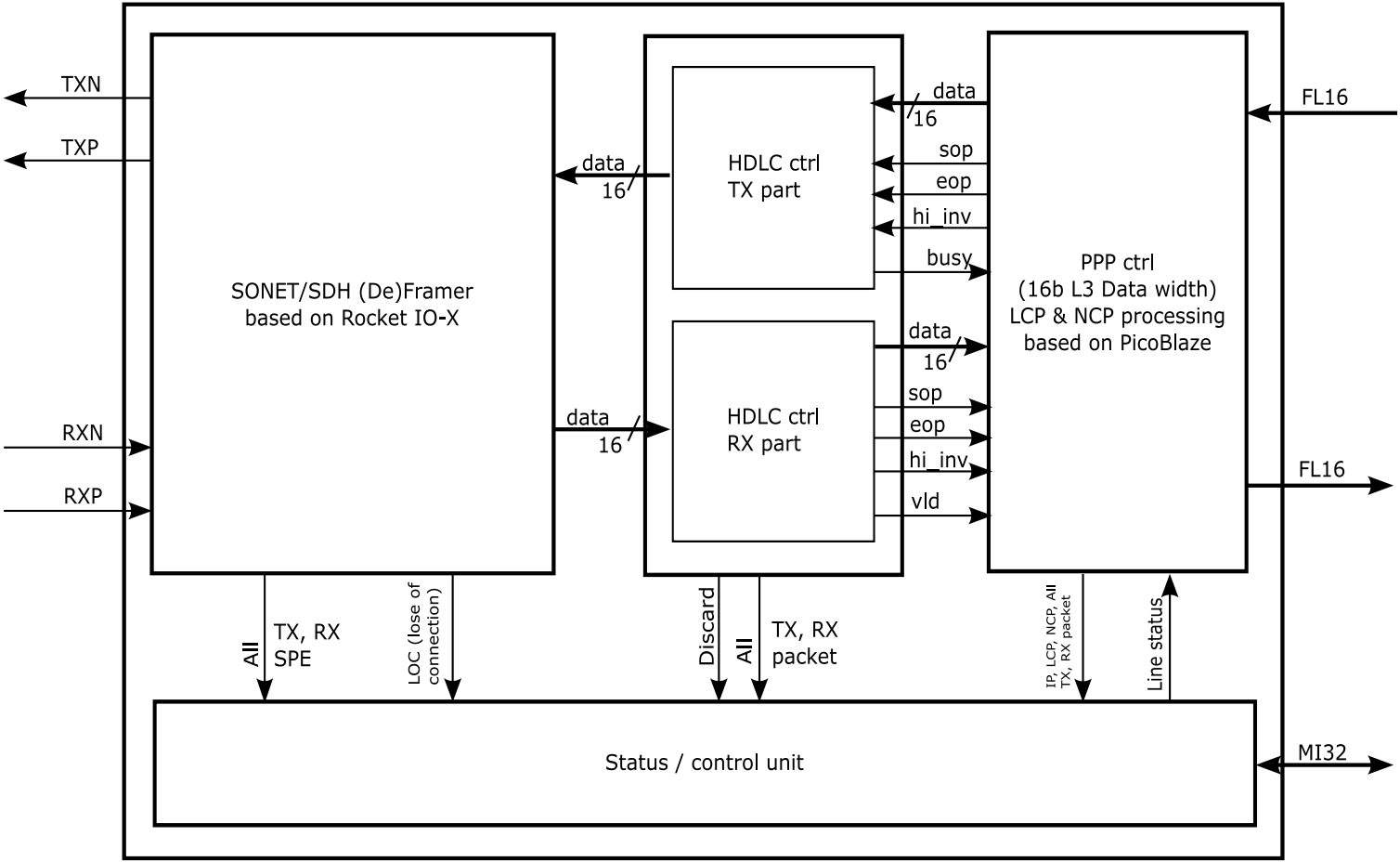
TXN
TXP
RXN
RXP
SONET/SDH (De)Framer
based on Rocket IO-X
data
16
HDLC ctrl
TX part
HDLC ctrl
RX part
data
16
sop
eop
hi_inv
busy
data
16
sop
eop
hi_inv
vld
PPP ctrl
(16b L3 Data width)
LCP & NCP processing
based on PicoBlaze
FL16
FL16
All
TX, RX
SPE
LOC (lose of
connection)
Discard
All
TX, RX
packet
IP, LCP, NCP, All
TX, RX packet
Line status
Status / control unit
MI32