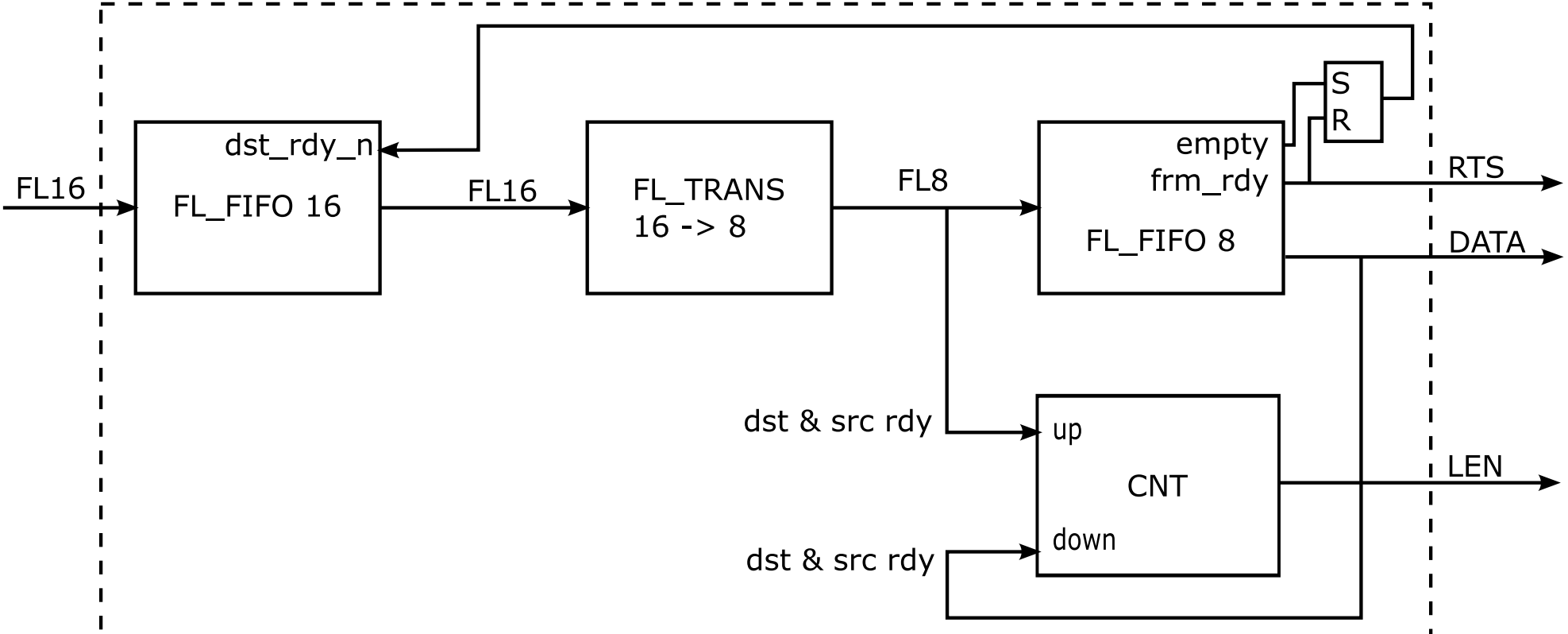
FL16
dst_rdy_n
FL_FIFO 16
FL16
FL_TRANS
16 -> 8
FL8
S
R
empty
frm_rdy
FL_FIFO 8
RTS
DATA
dst & src rdy
up
CNT
down
LEN
dst & src rdy