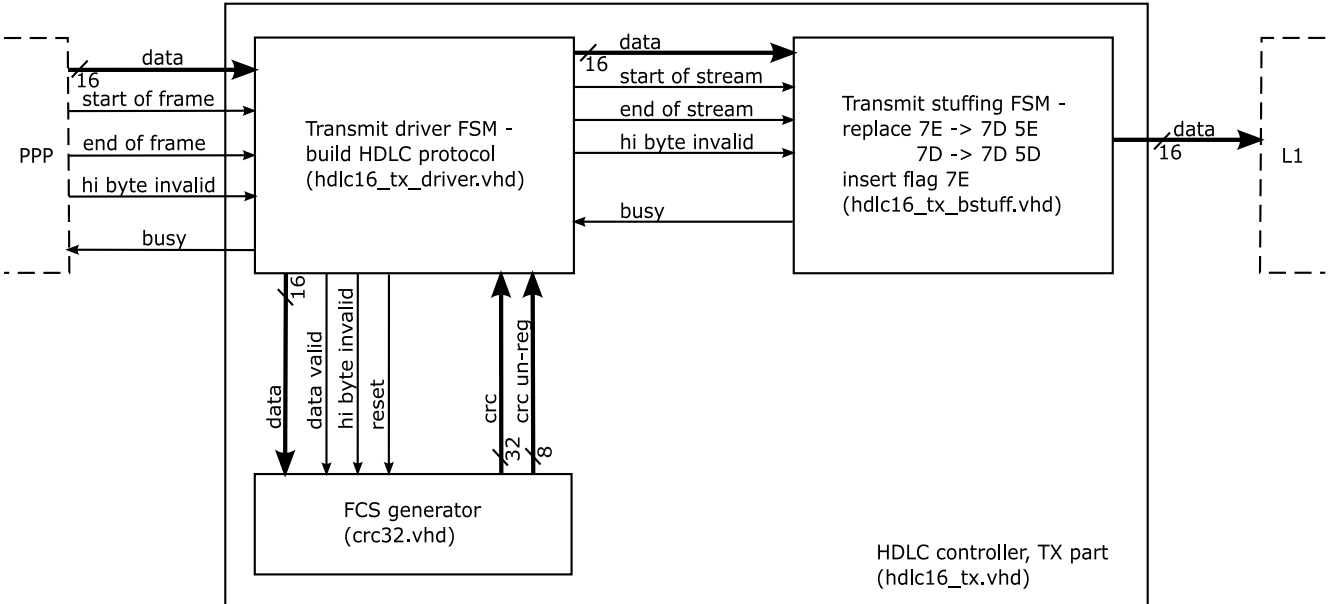
PPP
data
16
start of frame
end of frame
hi byte invalid
busy
Transmit driver FSM -
build HDLC protocol
(hdlc16_tx_driver.vhd)
data
16
start of stream
end of stream
hi byte invalid
busy
Transmit stuffing FSM -
replace 7E -> 7D 5E
7D -> 7D 5D
insert flag 7E
(hdlc16_tx_bstuff.vhd)
data
16
L1
16
data
data valid
hi byte invalid
reset
crc
32
crc un-reg
8
FCS generator
(crc32.vhd)
HDLC controller, TX part
(hdlc16_tx.vhd)